D/B/A ESSEX PB&R CORPORATION
4150 CARR LANE COURT • ST. LOUIS, MO 63119
(314) 351-6116 • (800) 296-7587 • FAX (314) 351-7181

# Crewmember
# Protective Breathing Equipment (PBE)

# User Reference and Procedures Manual

for

FAA TSO-C116 & TSO-C99 Approved
United Kingdom - Civil Aviation Authority (CAA) Approved
European Aviation Safety Agency (EASA) Approved
Civil Aviation Authority of China (CAAC) Approved
Brazilian Civil Aviation Authority (ANAC) Approved

**Crewmember PBE Assemblies**

Part No: DP3113(A)
Model No: MR-100(  )

Document No: PRM-01, Revision: 17  Dated: 03/26/2012

# TABLE OF CONTENTS

**TABLE OF CONTENTS** 2

**REVISION RECORD SHEET** 4

**FAA TSO-C116, TSO-C99, CAA, EASA, CAAC & ANAC APPROVED PBE ASSEMBLIES** 5

**CROSSOVER TABLE** 6

**1. DESCRIPTION AND OPERATION** 6

General Description of Equipment 6
- Purpose of the Equipment 6
- Hood Shell Construction 6
- Oxygen System 6
- Service/End-of-Service Indicator 8
- Packaging and Stowage Containers 8
- Compliance 8
- Useful Service Life 8

Operating Features 8
- Tamper-Evident Seals 8
- Pouch Access 9
- Breathing System 9
- Time Required to Put On and Take Off Hood 9
- Maneuverability During Use 9
- Carbon Dioxide Control 10
- Interpersonal Communications 10

Operating Steps 12
- General Sequence of Steps 12
- Accessing the Essex Crewmember PBE Equipment Pouch 12
- Open the Sealed Pouch 29
- Activate the Oxygen Supply 31
- Don the Activated Hood 32
- Wearing the Hood 34
- Remove and Discard the Hood 35
- Dispose of Equipment Properly 35

**2. INSPECTION AND FAULT ISOLATION** 36

General 36
Inspection Procedures 36
Statement of Warranty 41
Return Procedures 42

**3. REPAIR** 44

General 44
Refitting Broken, Torn or Missing Tamper-Evident Seals 44
Realigning Equipment Pouch within Stowage Containers 46

**4. INSTALLATION AND ASSEMBLY** 47

Mounting Locations 47

Installation Steps 47
Open-Ended Bracket 47
Closed-Ended Bracket 48
Flange-Mounted Stowage Case 49
Bracket-Mounted Stowage Case 49
Flame-Resistant Fabric Container 49
Internal-Mounted Stowage Case 50
Bracket-Mounted Stowage Case (Bracket provided) 50
Flame-Resistant Fabric Container 50
Bracket-Mounted Flame-Resistant Fabric Container 51

**5. RETROFITTED STOWAGE BRACKETS** 51

**6. THE ESSEX CREWMEMBER PBE TRAINING UNIT** 53

Introduction 53
Operating Features 53

Operating Steps 53
Plastic Training Liner (Optional) 53
General Sequence of Steps 54
Verbal Communications 54

Replacing Torn or Damaged Neck Seals 54
Maintenance Procedures 55
Handling and Storage 55

## Revision Record Sheet

| Rev # | Date | Description of Revision |
|---|---|---|
| 9 | 12/14/04 | Added Revision Sheet, page 4 to manual; added new model number MR-10050N to manual; revised Statement of Warranty; and re-numbered all pages accordingly. |
| 10 | 01/03/06 | Change all address and phone number references to the new, St. Louis location; added required changes that incorporate the elimination of the Visual Service Indicator (VSI) from PBE Model No's MR-10034N, MR-10036N, MR-10037N and MR-10042N; and added third type of barrier pouch (one with yellow nylon pull strap). |
| 11 | 02/10/06 | Revision includes: clarification of the PBE Stowage Bracket configurations of those PBE's that had the Visual Service Indicator (VSI) eliminated – changed "Manufactured before and after" to "Shipped or Repaired before and after"; and added photos of top view of PBE Model #'s MR-10034N, MR-10036N, & MR-10037N - Pages 17, 19, 20, and 22 were revised. On cover page of manual, Model No: 45667M37-B- ( ) was changed to Model No: 4566M37-B-( ). |
| 12 | 7/31/06 | Revision includes: adding new AS9100B & ISO9001-200 Certified logo; adding approval by the European Aviation Safety Agency (EASA), & the Civil Aviation Authority of China (CAAC) to cover page and to 1.A.(6) Compliance; and a revised Statement of Warranty that changed the warranty period from 10 years to 10 years 6 months and added an additional "foregoing warranty statement". |
| 13 | 8/29/07 | Added new PBE, Model # MR-10051N to manual; and deleted Two-Handled Pouch from manual (units of this nature are no longer in service). |
| 14 | 1/29/09 | Added approved by ANAC to cover sheet and to paragraph 1. A. (6) on page 9. Also, revised Inspection and Fault Isolation Flow Charts – Figures 19 & 20 on pages 38 & 39. |
| 15 | 9/30/11 | Revision includes: changing facility address; added some new product photos & line sketches; deleted references to old "Dupont" model numbers; added new PBE Model Numbers (MR-10049NA & MR-10052N); and added photos of humidity indicators. |
| 16 | 1/01/12 | Changed Company Name from Essex PB&R Corporation to Essex Industries dba Essex PB&R Corporation. |
| 17 | 3/26/12 | Revised: Section 2. Inspection and Fault Isolation by: eliminating references to Visual Service Indicators, and Firmness of Barrier Pouch; and modified Flow Charts Figures 19 & 20; and Section 5. Retrofitted Stowage Brackets – eliminating the reference that Retrofit Kits are available for installation or sale. |
| | | |
| | | |
| | | |
| | | |
| | | |
| | | |
| | | |
| | | |

**FAA TSO-C116, TSO C-99, CAA, EASA, CAAC, AND ANAC APPROVED PBE ASSEMBLIES**

| Model Number | Description |
|---|---|
| MR-10021N | Crewmember PBE - Training Unit |
| MR-10022N | Crewmember PBE with Concealed Mounting Holes and Viewing Window |
| MR-10034N | Crewmember PBE with Bracket Mounted Case (Stowage Box A) |
| MR-10035N | Crewmember PBE with Flame-Resistant Fabric Pouch |
| MR-10036N | Crewmember PBE with Bracket Mounted Case (Stowage Box C) |
| MR-10037N | Crewmember PBE with Flange Case (Stowage Box B) |
| MR-10039N | Crewmember PBE with Bracket Mounted Case and Viewing Window |
| MR-10042N | Crewmember PBE with Open Ended Stowage Bracket |
| MR-10046NS | Crewmember PBE with Closed Ended Straight Strap Bracket |
| MR-10046NY | Crewmember PBE with Closed Ended Y-Strap Bracket |
| MR-10046RS | Retrofitted Crewmember PBE into a Closed Ended Straight Strap Bracket |
| MR-10046RY | Retrofitted Crewmember PBE into a Closed Ended Y-Strap Bracket |
| MR-10047N | Crewmember PBE without stowage Bracket |
| MR-10049N | Crewmember PBE with Closed Ended Y-Strap Bracket and Humidity Indicator Window |
| MR-10049NA | Crewmember PBE with Closed Ended Y-Strap Bracket and Humidity Indicator Window |
| MR-10050N | Crewmember PBE with Concealed Mounting Holes and Viewing Window |
| MR-10051N | Crewmember PBE with Flame-Resistant Fabric Pouch |
| MR-10052N | Crewmember PBE in Flame-Resistant Pouch affixed to Wall Mount Assembly |

Note: Part Number DP3113(A) is the Essex Crewmember PBE without a barrier pouch or any type of stowage bracket. The Current Model Numbers designate the type of barrier pouch and bracket configuration that Part Number DP3113(A) is assembled into.

# 1. DESCRIPTION AND OPERATION

## A. General Description of Equipment

### (1) Purpose of the Equipment

The Essex Crewmember PBE (**Ref. Figure 1 on page 7**) is a self-contained, portable, personal breathing device designed to safeguard the wearer from the effects of smoke, carbon dioxide, harmful gases, and oxygen deficiency while managing in-flight fire, smoke or fume emergencies.

The equipment improves the wearer's visibility in smoke-filled compartments, protects the head and face from melting or dripping plastics, and shields the head against brief exposure to heat and flame.

The primary functional component in the Essex Crewmember PBE is a portable hood that contains both a breathable oxygen supply and lithium hydroxide (LiOH) scrubber panels that absorb exhaled carbon dioxide.

The hood has a self-fitting neck opening that seals out contaminants, retains the oxygen and keeps the hood inflated during use. The entire unit is hermetically sealed to protect the LiOH scrubber panels from outside air.

### (2) Hood Shell Construction

The Essex Crewmember PBE hood is fabricated from a durable, tear-resistant combination of polyimide and PFA films. The hood's inner surface has an anti-fog coating to improve visibility.

### (3) Oxygen System

The Essex Crewmember PBE has two oxygen cylinders. Together they hold a minimum of 36 liters of Aviator Grade oxygen. These cylinders meet SAE Standard AS 8010 for breathing-oxygen purity, and have rupture protection in case of over pressurization.

Overall View of Essex Crewmember PBE (As Worn)

Figure 1

(4) Service/End-of-Service Indicator

The Essex Crewmember PBE features a battery-powered green and red light Service/End-of-Service Indicator. Mounted slightly below eye level on the left inner side of the hood, this indicator functions as a secondary indicator for monitoring oxygen activation (primary indicator is the inflation of the hood shell), reassuring the wearer that the equipment is functioning, and signaling when the equipment's service life is ended. (**Ref. Figure 1 on page 7**).

(5) Packaging and Stowage Containers

The Essex Crewmember PBE alone weighs 3.2 lbs (1.45 kg). It is folded and packaged in a moisture resistant pouch, and stowed in a protective container (made either from molded plastic, metal, or from Flame-Resistant fabric, depending on model). A packaged Crewmember PBE is normally installed within 3 ft (.9 m) of each required on-board fire extinguisher. Each airline should receive regulatory approval for installation locations.

(6) Compliance

The Essex Crewmember PBE complies with the requirements of FAA Action Notice A8150.2 and is approved according to FAA TSO-C116 and TSO-C99. The Essex Crewmember PBE is also approved: under BCAR B4-8, United Kingdom – Civil Aviation Authority (CAA) requirements, thereby we are also approved by the European Aviation Safety Agency (EASA); by the Civil Aviation Authority of China (CAAC); and by the Brazilian Civil Aviation Authority (ANAC).

(7) Useful Service Life (Warranty Period)

The Essex Crewmember PBE has a 10-year 6-month, warranted, useful service life, beginning from the date of manufacture.

B. Operating Features

(1) Tamper-Evident Seals

To ensure that the Essex Crewmember PBE has not been tampered with, units in hard case stowage containers have tamper-evident seals.

For closed stowage brackets (MR-10046NS, and MR-10046NY), the tamper-evident seals are the red-knotted cable ties (Type A) or the tamper-evident labels (Type C). (**Ref. Figure 2 on page 11**)

For open-ended stowage brackets (MR-10042N) the tamper-evident seals are the green plastic padlocks (Type B). (**Ref. Figure 2 on page 11**)

For bracket-mounted, flange-mounted, or internal-mounted stowage cases ((MR-10022N, 34N, 36N, 37N, 39N, 49N, 49NA, and 50N), the tamper-evident seals are the tamper-evident labels (Type C). (**Ref. Figure 2 on page 11**)

There are no seals for units stowed in Flame-Resistant fabric containers (MR-10035N, MR-10051N, and MR-10052N).

(2) Pouch Access

The sealed barrier pouch containing the Essex Crewmember PBE is easily accessed and removed from its stowage container (**Ref. para. 1.C. (2) on page 12**). A force of approximately 18-28 pounds will be required to remove the pouch, or to lift the lid & break the tamper-evident seals.

(3) Breathing System

Once the pouch is removed from its container and opened, oxygen flow is initiated by snapping the two cylinders apart, which in turn activates the flashing green light on the Service/End-of-Service Indicator. One bottle releases oxygen rapidly, whereas the second bottle discharges oxygen slowly. An audible hissing sound and inflation of the unit within (2) minutes indicates the PBE is operating properly.

Once donned, the Essex Crewmember PBE will protect the wearer for up to 15 minutes. Although both bottles will completely discharge in 8 to 10 minutes, enough oxygen will remain for the full, specified 15 minutes of respiratory protection. When the unit deflates to the point where it touches the wearer's head and face, or when the red light on the Service/End-of-Service Indicator flashes, the unit's useful life has ended and must be removed.

The Essex Crewmember PBE operates at a positive pressure. The neck seal acts as a relief valve to prevent excessive pressure from building up inside the hood.

(4) Time Required to Put On and Take Off Hood

A trained user can access and don the hood in approximately 15 seconds. It can be removed in less than 5 seconds.

(5) Maneuverability During Use

The Essex Crewmember PBE does not restrict or interfere with normal body movements. Even when fully inflated, it is compact enough that the wearer can pass

through openings as small as 18 in x 18 in (460 mm x 460 mm).

(6) Carbon Dioxide Control

Special fabric panels inside the hood control carbon dioxide buildup. These panels contain a dustless lithium hydroxide absorbent sealed inside a double walled membrane, which keeps carbon dioxide concentrations at safe levels during the hood's 15-minute service period.

(7) Interpersonal Communications

Persons wearing the Essex Crewmember PBE can communicate by unaided voice with other people wearing hoods, at a distance of at least 13.1 ft (4 m) away.

When using an interphone, megaphone or microphone, it may be necessary to pull the skirt of the hood down so the scrubber is below mouth level. Press the phone unit firmly against the hood film in front of the mouth as shown in **Figure 1A on page 10**, minimizing the gap between the mouth and device.

Megaphone Operation Illustration

Figure 1A

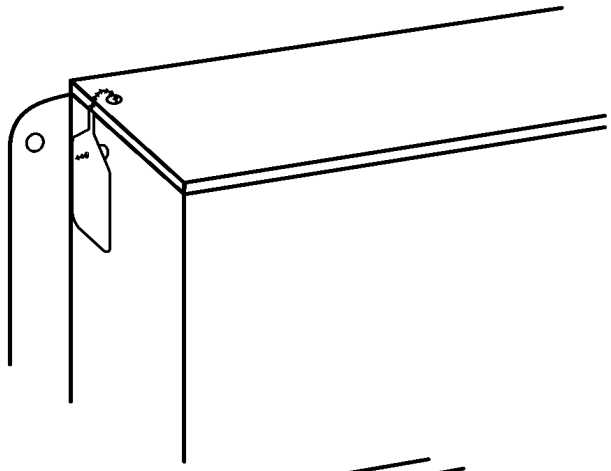

**Type A**
Red knotted plastic rope
P/N 6630000-1

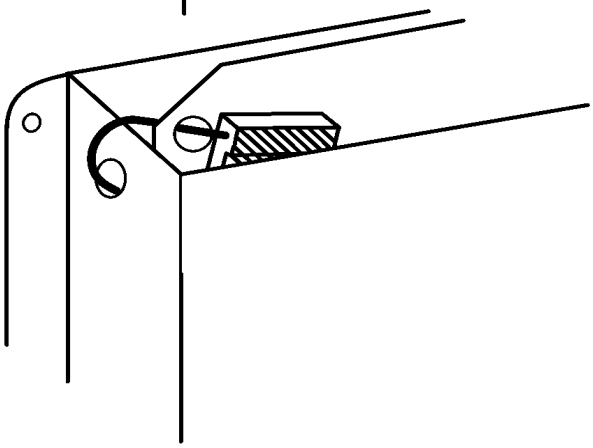

**Type B**
Green plastic padlock
P/N 1001

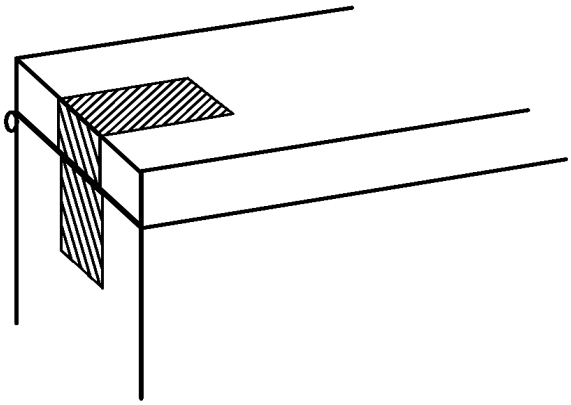

**Type C**
Tamper-evident label
P/N BP4231

Types of Tamper-Evident Seals

Figure 2

C. Operating Steps

(1) General Sequence of Steps

The operating steps for an Essex Crewmember PBE are generally the same for all models, but access to the pouch will vary somewhat depending on type of stowage container installed on the aircraft.

The normal operating sequence is: access the PBE, open the equipment pouch, activate the system, don the hood, wear it as needed, then remove and dispose of it after use.

The minor differences in accessing the pouch from its stowage container are noted below.

(2) Accessing the Essex Crewmember PBE Equipment Pouch

Follow the pouch removal procedures that apply to your appropriate stowage container.

(a) Open-Ended, Stowage Bracket Container (MR- 10042N). (**Ref. Fig 9 on page 21**)

Grasp the end of the pouch firmly using both hands, if possible. Sharply pull the pouch out of its bracket. This sharp pull will break the two tamper-evident seals and free the equipment pouch from the bracket. Approximately 18 to 28 pounds of force will be required to remove the pouch from the bracket.

(b) Closed Bracket Stowage Container (MR-10046NS, MR-10046NY, MR-10049N and MR-10049NA). (**Ref. Figures 10, 11, 12, and 12A on pages 22, 23, 24, and 25 respectively**)

Closed bracket stowage containers can be opened by grasping the strap attached to the lid or by grasping the lid itself, and pulling sharply to break the tamper-evident seals. Approximately 18 to 28 pounds of force will be required to lift the lid and break the tamper-evident seals. Grab the end of the pouch and pull it from the bracket.

(c) Flange-Mounted Stowage Case (MR-10037N). (**Ref. Figure 7 on page 19**)

Lift up the lid latch/clasp and pull the box lid open sharply. This will break the tamper-evident seals on the container. Approximately 18 to 28 pounds of force will be required to lift the lid and break the tamper-evident seals. Grasp the end of the pouch or grab the yellow nylon strap (if so equipped) and pull it from the container.

(d) Bracket-Mounted Stowage Case (MR-10034N, MR-10036N and MR-10039N). (**Ref. Figures 4, 6, and 8 on pages 16, 18, and 20 respectively**)

If the stowage container is strapped to a supporting bracket (as may be the case in certain aircraft installations), first loosen the straps holding the container then remove the stowage container.

This container has handles on both top and bottom, or on one side. Hold it by the appropriate carrying handle then unlatch the lid. Open the lid sharply to break the tamper-evident seals on the container. Approximately 18 to 28 pounds of force will be required to lift the lid and break the tamper-evident seals. Grasp the end of the pouch or grab the yellow nylon strap (if so equipped) and remove it from the container.

(e) Flame-Resistant Fabric Stowage Container (MR-10035N). (**Ref. Figure 5 on page 17)**

Pull on the nylon tabs to release the container's flaps. This container can be opened on three sides. Once the flaps are free, remove the equipment pouch from the container.

(f) Internal-Mounted Stowage Case (MR-10022N). (**Ref. Figure 3 on page 15**)

Slide the lid latch/clasp and pull the box lid open sharply. This will break the tamper-evident seals on the container. Approximately 18 to 28 pounds of force will be required to lift the lid and break the tamper-evident seals. Grasp the yellow nylon strap and pull it from the container.

(g) Internal-Mounted Stowage Case (MR-10050N). (**Ref. Figure 13 on page 26**)

Unlatch both clasps and open lid by grasping the strap attached to the lid and pull sharply to break the tamper-evident seals. Approximately 18 to 28 pounds of force will be required to lift the lid and break the tamper-evident seals. Grab the end of the pouch and pull it from the container.

(h) Flame-Resistant Fabric Stowage Container (MR-10051N). **(Ref. Figure 13A on page 27)**

Pull on the nylon tabs to open the container's closure flap. Remove the equipment pouch from the container.

(i) Bracket Mounted Flame-Resistant Fabric Stowage Container (MR-10052N). **(Ref. Figure 13B on page 28)**

First loosen the straps holding the container onto the bracket then remove the stowage container. Pull on the nylon tabs to open the container's closure flap. Remove the equipment pouch from the container.

Accessing the Essex PBE Pouch from the Internal-Mounted Stowage Case

| Weight | 4.7 lbs | | |
|---|---|---|---|
| | H | W | D |
| Inches | 9 3/4 | 8 15/32 | 3 1/4 |
| cm | 24.77 | 21.51 | 8.26 |

**Figure 3**

Accessing the Essex PBE Pouch from the Bracket-Mounted Stowage Case

Bracket with Visual Service Indicator (VSI) – Shipped or Repaired before 12/01/05

Clear Inspection Window showing: Serial # / Manufacturer Bar Code Label; Humidity Indicator; and Replace By Date Label

Bracket without VSI and with Inspection Window – Shipped or Repaired after 12/01/05

| Weight | 4.6 lbs | | |
|---|---|---|---|
| | H | W | D |
| Inches | 9 3/4 | 8 15/32 | 3 1/4 |
| cm | 24.77 | 21.51 | 8.26 |

**Figure 4**

# Accessing the Essex PBE Pouch from the Flame-Resistant Fabric Stowage Container

| Weight | 3.3 lbs | | |
|---|---|---|---|
| | H | W | D |
| Inches | 11 | 16 | 2 |
| cm | 27.94 | 40.64 | 5.08 |

**Figure 5**

# Accessing the Essex PBE Pouch from the Bracket-Mounted Stowage Case

Bracket with Visual Service Indicator (VSI) – Shipped or Repaired before 12/01/05

Clear Inspection Window showing: Serial # / Manufacturer Bar Code Label; Humidity Indicator; and Replace By Date Label

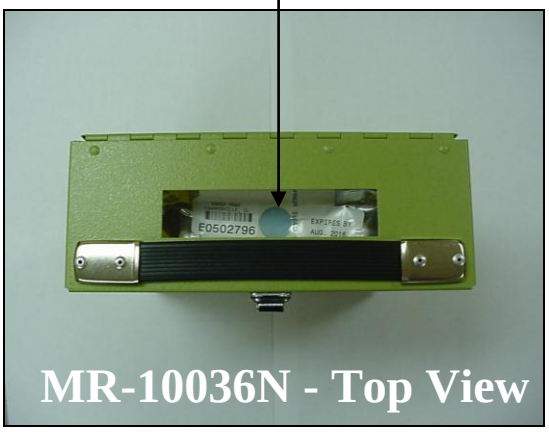


Bracket without VSI and with Inspection Window – Shipped or Repaired after 12/01/05

| Weight | 4.6 lbs | | |
|---|---|---|---|
| | H | W | D |
| Inches | 9 3/4 | 8 15/32 | 3 1/4 |
| cm | 24.77 | 21.51 | 8.26 |

**Figure 6**

# Accessing the Essex PBE Pouch from the Flange-Mounted Stowage Case

Bracket with Visual Service Indicator (VSI) – Shipped or Repaired before 12/01/05

Clear Inspection Window showing: Serial # / Manufacturer Bar Code Label; Humidity Indicator; and Replace By Date Label

Bracket without VSI and with Inspection Window – Shipped or Repaired after 12/01/05

| Weight | 4.6 lbs | | |
|---|---|---|---|
| | H | W | D |
| Inches | 9 15/16 | 9 5/8 | 3 1/4 |
| cm | 23.65 | 24.45 | 8.26 |

**Figure 7**

# Accessing the Essex PBE Pouch from the Bracket-Mounted Stowage Case with Information Viewing Window

| Weight | 4.9 lbs | | |
|---|---|---|---|
| | H | W | D |
| Inches | 9 3/4 | 8 7/8 | 3 3/8 |
| cm | 24.77 | 22.54 | 8.57 |

**Figure 8**

Accessing the Essex PBE Pouch from the Open-Ended Stowage Bracket Container

MR-10042N with Visual Service Indicator (VSI) – Shipped or Repaired before 1/01/05

MR-10042N without Visual Service Indicator (VSI) – Shipped or Repaired after 1/01/05

| Weight | 4.6 lbs | | |
|---|---|---|---|
| | H | W | D |
| Inches | 13 1/4 | 11 11/32 | 2 1/2 |
| cm | 33.66 | 28.81 | 6.35 |

**Figure 9**

Accessing the Essex PBE Pouch from the Closed Stowage Bracket Container

| Weight | 5.3 lbs | | |
|---|---|---|---|
| | H | W | D |
| Inches | 13 5/8 | 11 11/32 | 2 3/4 |
| cm | 34.61 | 28.81 | 6.99 |

**Figure 10**

Accessing the Essex PBE Pouch from the Closed Stowage Bracket Container

| Weight | 5.3 lbs | | |
|---|---|---|---|
| | H | W | D |
| Inches | 13 5/8 | 11 11/32 | 2 3/4 |
| cm | 34.61 | 28.81 | 6.99 |

**Figure 11**

Accessing the Essex PBE Pouch from the Closed Stowage Bracket Container

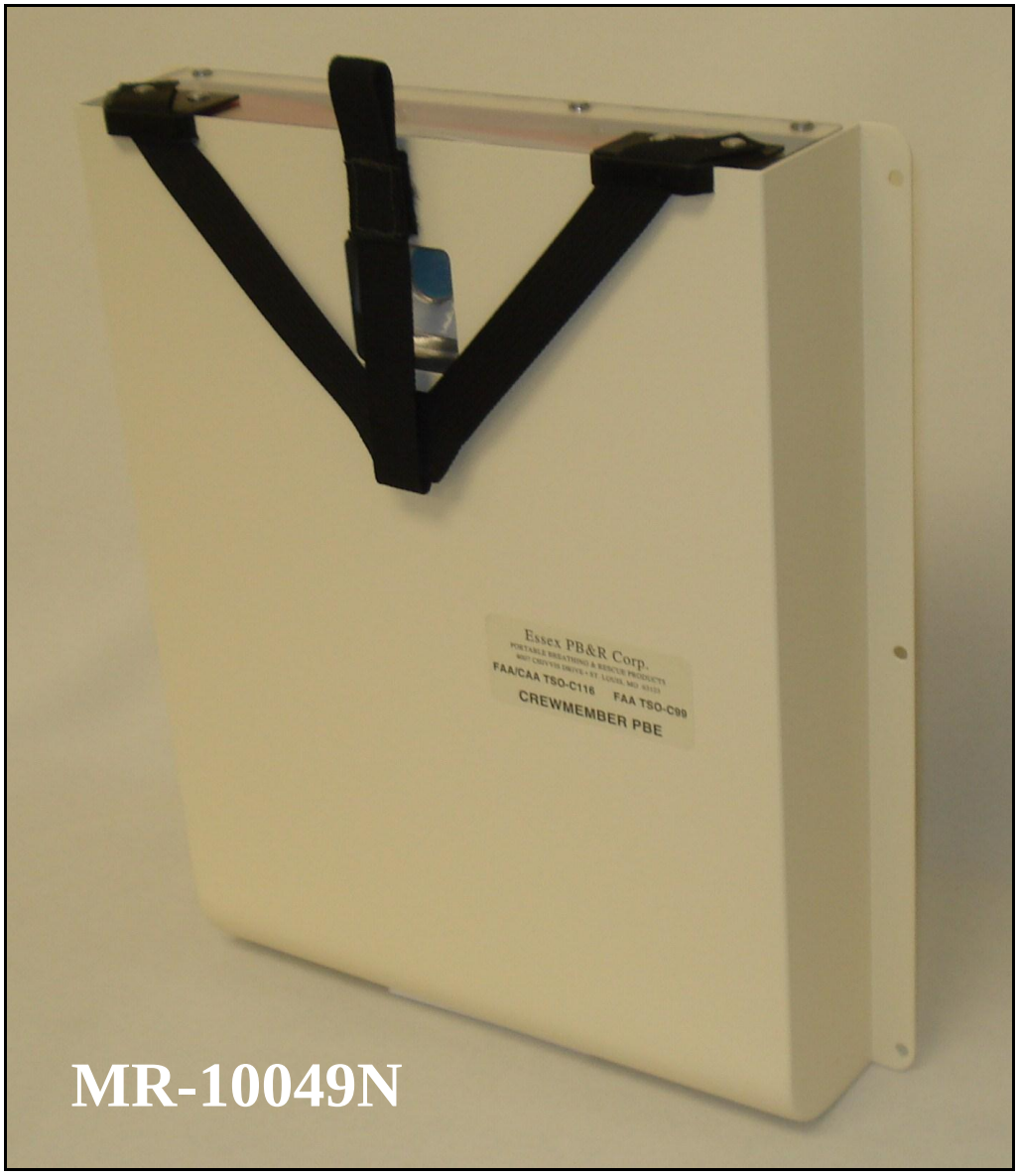


| Weight | 4.9 lbs | | |
|---|---|---|---|
| | H | W | D |
| Inches | 13 1/16 | 11 3/8 | 2 5/8 |
| cm | 33.18 | 28.89 | 6.67 |

**Figure 12**

Accessing the Essex PBE Pouch from the Closed Stowage Bracket Container

| Weight | 4.9 lbs | | |
|---|---|---|---|
| | H | W | D |
| Inches | 13 1/16 | 11 3/8 | 2 3/4 |
| cm | 33.18 | 28.89 | 6.99 |

**Figure 12A**

# Accessing the Essex PBE Pouch from the Internal-Mounted Stowage Case

| Weight | 5.0 lbs | | |
|---|---|---|---|
| | H | W | D |
| Inches | 12 3/8 | 12 3/8 | 2 3/4 |
| cm | 31.43 | 31.43 | 6.99 |

**Figure 13**

Accessing the Essex PBE Pouch from the
Flame-Resistant Fabric Stowage Container

Front View

Rear View

| Weight | 3.3 lbs | | |
|---|---|---|---|
| | H | W | D |
| Inches | 12 3/4 | 11 3/4 | 2 |
| cm | 32.39 | 29.85 | 5.08 |

**Figure 13A**

Accessing the Essex PBE Pouch from the Bracket-Mounted Flame-Resistant Fabric Stowage Container

| Weight | 3.8 lbs | | |
|---|---|---|---|
| | H | W | D |
| Inches | 9 3/4 | 8 7/8 | 3 1/4 |
| cm | 24.77 | 22.54 | 8.26 |

**Figure 13B**

(3) Open the Sealed Pouch (**Ref. Figure 14 on page 30**)

(a) There are two (2) types of equipment pouches used with the Essex PBE.

1) The Tear Open Pouch is recognized by the bright red tear strip at the top of the pouch. To open, grasp the pouch in one hand at either of the small red grip tabs located on each side of the pouch. With the other hand grasp the red tear strip and tear across the pouch in the direction of the arrows. This pouch may be opened from either direction.

2) The Tear Open Pouch with the Yellow Nylon Pull Strap is recognizable by the bright red tear strip at the top of the pouch and the yellow pull strap at the bottom of the pouch. To open, grasp the pouch in one hand at either of the small red grip tabs located on each side of the pouch. With the other hand grasp the red tear strip and tear across the pouch in the direction of the arrows. This pouch may be opened from either direction.

NOTE: HOLD THE POUCH TIGHTLY BETWEEN THE KNEES WHILE OPENING IT TO PREVENT THE HOOD FROM FALLING TO THE FLOOR.

(b) Remove the hood from the pouch then discard the pouch.

**CAUTION: BEFORE ACTIVATING THE OXYGEN, REMOVE OBJECTS FROM AROUND THE HEAD (SUCH AS HAIR COMBS, LONG EARRINGS OR JEWELRY) TO PREVENT THEM FROM PUNCTURING THE HOOD OR DAMAGING THE NECK SEAL.**

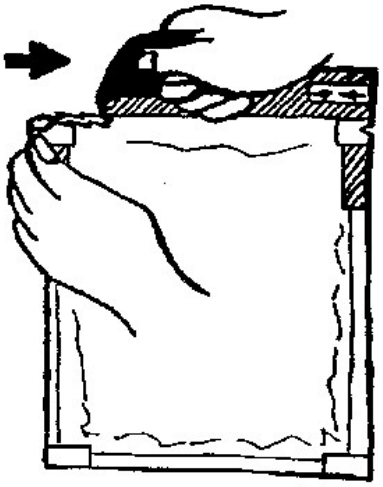

B. Tear Open Pouch

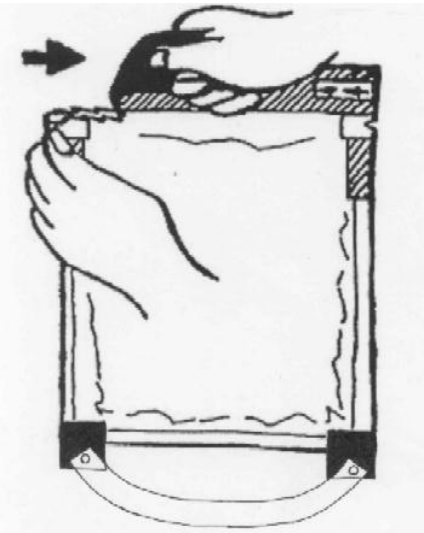

C. Tear Open Pouch with Nylon Pull Strap
(Pouch opens the same as B. above)

Opening the Sealed Equipment Pouch to Remove the Essex PBE

Figure 14

(4) Activate the Oxygen Supply (**Ref. Figure 15 below**).

(a) Before activating the oxygen supply, be sure to position the front of the hood correctly. There are two ways to be sure of this.

(i) If visibility permits, locate the amber-colored, transparent, non-metalized area of the hood. This is the front of the hood. It should not be visible during the activation and donning. The user should see only the metalized area.

(ii) While grasping the oxygen cylinders (one in each hand), make sure that the oxygen valves are pointing away from the user's body. (The oxygen valves are thinner than the cylinders and will be covered with felt.)

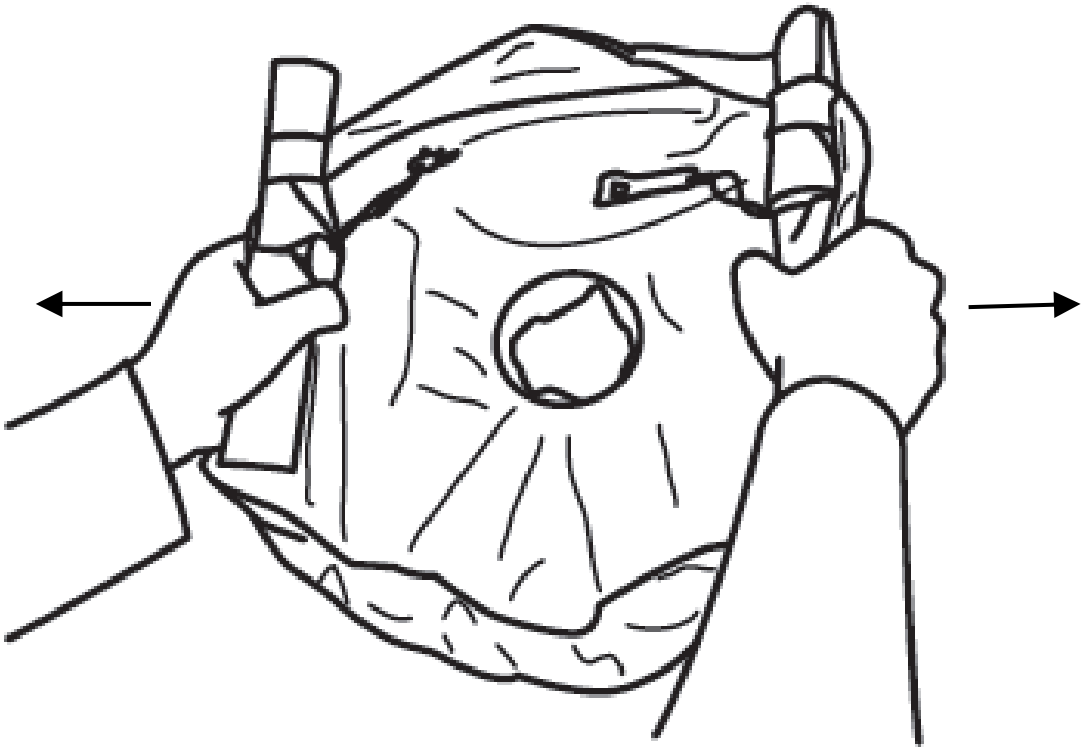

Activating the Essex PBE Oxygen Supply Prior to Donning

Figure 15

(b) Unfold the hood far enough to reveal the oxygen cylinders. Grasp each securely, one in each hand, make sure that the oxygen valves are pointing away from the user's body. (The oxygen valves are thinner than the cylinders and will be covered with felt.)

(c) Sharply snap the oxygen cylinders away from each other. This sharp action pulls on the two cords that trigger the oxygen flow and activates the green light on the Service/End-of-Service Indicator.

NOTE: DO NOT PULL THE OXYGEN CYLINDERS APART SLOWLY. DOING SO WILL INCREASE THE FORCE NECESSARY TO ACTIVATE THE EQUIPMENT.

**WARNING: TO AVOID LOSING OXYGEN ONCE THE SYSTEM IS ACTIVATED, AND TO MINIMIZE THE AMOUNT OF TOXINS THAT MAY ENTER THE HOOD, DON THE HOOD PROMPTLY AFTER ACTIVATION.**

(5) Don the Activated Hood (**Ref. Figure 16 on page 33**)

(a) The sharp snapping action required to activate the equipment will reveal the self-fitting elastic neck seal and its opening.

(b) Hold the equipment at about waist level. Place both hands inside the neck seal opening, with palms facing each other. Stretch the neck seal open by spreading the hands apart.

(c) Bend head down, lift up the opened hood with both hands, and then pull over the head until it fits securely around the neck.

NOTE: EYEGLASS WEARERS SHOULD FIRST POSITION THE NECK SEAL AGAINST THE BACK OF THE HEAD, THEN PULL THE HOOD FORWARD AND DOWN OVER THE EYEGLASSES.

NOTE: MAKE SURE THAT SHIRT COLLARS OR SCARVES DO NOT INTERFERE WITH THE NECKSEAL.

Donning the Activated Essex PBE

**Figure 16**

**WARNING: AFTER DONNING THE HOOD, DO NOT OPEN THE NECK SEAL EXCEPT TO QUICKLY TUCK IN HAIR, OR TO ADJUST THE HOOD'S POSITION. HAVE ANOTHER PERSON HELP IF NEEDED.**

(d) The equipment is donned correctly if the oxygen cylinders are positioned over the shoulders under each ear and the transparent amber-colored area is facing front.

If the hood is accidentally donned backwards, do not remove it. Instead, rotate the hood until it is properly positioned.

**WARNING: IF EITHER OF THE FOLLOWING CONDITIONS EXIST, REMOVE THE EQUIPMENT AND DISCARD IT IMMEDIATELY:**

**(1) THE SOUND OF THE OXYGEN FLOW IS INAUDIBLE IMMEDIATELY AFTER DONNING.**

**(2) THE HOOD DOES NOT INFLATE WITHIN 2 TO 3 MINUTES, OR COLLAPSES.**

**WARNING: DO NOT PASS ALONG AN ACTIVATED HOOD TO ANOTHER PERSON ONCE IT IS DONNED. THIS WILL CAUSE OXYGEN TO ESCAPE AND CAN SUBSTANTIALLY REDUCE PERFORMANCE.**

(6) Wearing the Hood

Full hood inflation takes from 2 to 3 minutes but the equipment is ready for use immediately. During the first few minutes the oxygen makes a noticeably loud, hissing sound that gradually diminishes. The oxygen stops flowing after 8 to 10 minutes, but enough oxygen remains in the hood for a full 15 minutes of usage.

**WARNING: IF THE HOOD COLLAPSES AROUND THE FACE AT ANYTIME, REMOVE IT IMMEDIATELY AND OBTAIN A NEW ONE.**

**WARNING: DO NOT APPROACH ANY CLOSER TO A FIRE OR FLAMES THAN THE NORMAL RANGE OF AN APPROVED FIRE EXTINGUISHER, SINCE THE USER WILL ORDINARILY NOT BE WEARING FIRE-RESISTANT CLOTHING.**

(a) Observe the flashing green End-of-Service Indicator light inside the hood, located to the left and just below eye level. When the red light flashes with the green light, or when the hood collapses, move immediately to a safe area and remove the unit.

(b) Note that warming and condensation inside the hood may occur. If this interferes with vision, press the hood against the face to wipe away condensation.

(c) Some users may experience mild ear popping as the air pressure inside the hood gradually increases due to the oxygen flow.

(d) Interphone, megaphone and microphone communication are possible while the hood is still inflating and during its operation. Press the phone device directly against the hood for best operation. Or, place the phone device up against the Adam's apple.

**WARNING: DO NOT REMOVE THE HOOD WHILE NEAR SPARKS OR OPEN FLAME. SOME RESIDUAL OXYGEN MAY REMAIN IN BOTH THE HOOD AND HAIR.**

(7) Remove and Discard the Hood

Remove the PBE if the hood collapses over the face, or as soon as the red light in the End-of-Service indicator comes on, or immediately after the emergency is under control, whichever comes first.

(a) Leave the area of the emergency before attempting to remove the hood.

(b) To remove the hood, insert both hands under the neck seal, beneath the chin. Lift the hood up and out to clear the face.

NOTE: EYEGLASS WEARERS SHOULD FIRST INSERT BOTH HANDS UNDER THE NECK SEAL, THEN PULL THE HOOD FORWARD AND OUTWARD, LIFTING IT UP OVER THE HEAD TO AVOID DISLODGING THE EYEGLASSES.

(8) Dispose of Equipment Properly

**WARNING: DO NOT CUT INTO THE WHITE PANELS AROUND THE COLLAR OR UP THE BACK OF THE HOOD. THIS MAY EXPOSE LITHIUM HYDROXIDE AND LITHIUM CARBONATE, WHICH CAN IRRITATE THE SKIN AND BREATHING PASSAGES.**

Follow these steps in properly disposing of spent equipment.

(a) Cut the neck seal into four quadrants.

(b) Cut a hole in the amber-colored transparent film area at least 5 inches across.

(c) If the oxygen system has not yet been activated, do so before disposing of the equipment.

(i) Handle the oxygen disposal in an area where there is no potential danger from sparks or other fire hazards.

(ii) After equipment has been activated, leave it alone for at least one hour, so that all residual oxygen will dissipate.

(d) Dispose of the hood in compliance with federal, state and local EPA regulations. Contact the appropriate agency for proper disposal procedures. The white scrubber panels contain about 200 grams of lithium hydroxide and/or lithium carbonate.

## 2. INSPECTION AND FAULT ISOLATION

A. General

(1) Inspection and inspection frequency of PBE's in stowage containers should be in accordance with your governing regulatory authority and your airline operating procedure. The stowage containers will be inspected by one or more of the following indicators: replace by date label, tamper-evident seals, and humidity indicators. Please follow the inspection method that corresponds with your aircraft's PBE stowage container.

(2) For all models, the first step is to inspect the date on the replace by date label. If the replace by date has not been exceeded proceed to the next inspection step. If the replace by date has been exceeded, the unit must be immediately replaced.

B. Methods of Inspection after verification that the unit has not exceeded the replace by date. Refer to Figures 19 and 20 on pages 39 and 40, respectively, for Essex's recommended inspection procedures.

(1) **Tamper-Evident Seals:** Tamper-evident seals are the primary and most recommended means of determining serviceability for PBE's. There are currently three different types of tamper-evident seals used on PBE's, depending on which type of stowage container that the PBE's are placed in. **See Figure 2, Page 11** of this manual for an illustration of the different types of tamper-evident seals.

(2) **Humidity Indicator:** Humidity indicators represent a second level of PBE inspection, if so required. The purpose of the humidity indicator is to show that moisture has gotten inside of the barrier pouch, and may come in contact with the lithium hydroxide scrubbers inside of the hood. Please see Figure 17 below that illustrates accept/reject criteria if you are required to use this method of inspection.

Blue Indicator: ACCEPT

Pink Indicator: REJECT

Humidity Indicator Accept vs. Reject Criteria

Figure 17

C. To determine which method of inspection is needed for your PBE, easy to read flow charts are provided in this manual.

(1) For Model Numbers: MR-10022N, MR-10034N, MR-10036N, MR-10037N, MR-10039N, MR-10042N, MR-10046NS, MR-10046NY, MR-10046RS, MR-10046RY, MR-10049N, MR-10049NA, MR-10050N, refer to **Figure 19 on page 39** for your method of inspection.

(2) For Model Numbers: MR-10035N, MR-10047N, MR-10051N, and MR-10052N refer to **Figure 20 on page 40** for your method of inspection.

**Page Intentionally Left Blank**

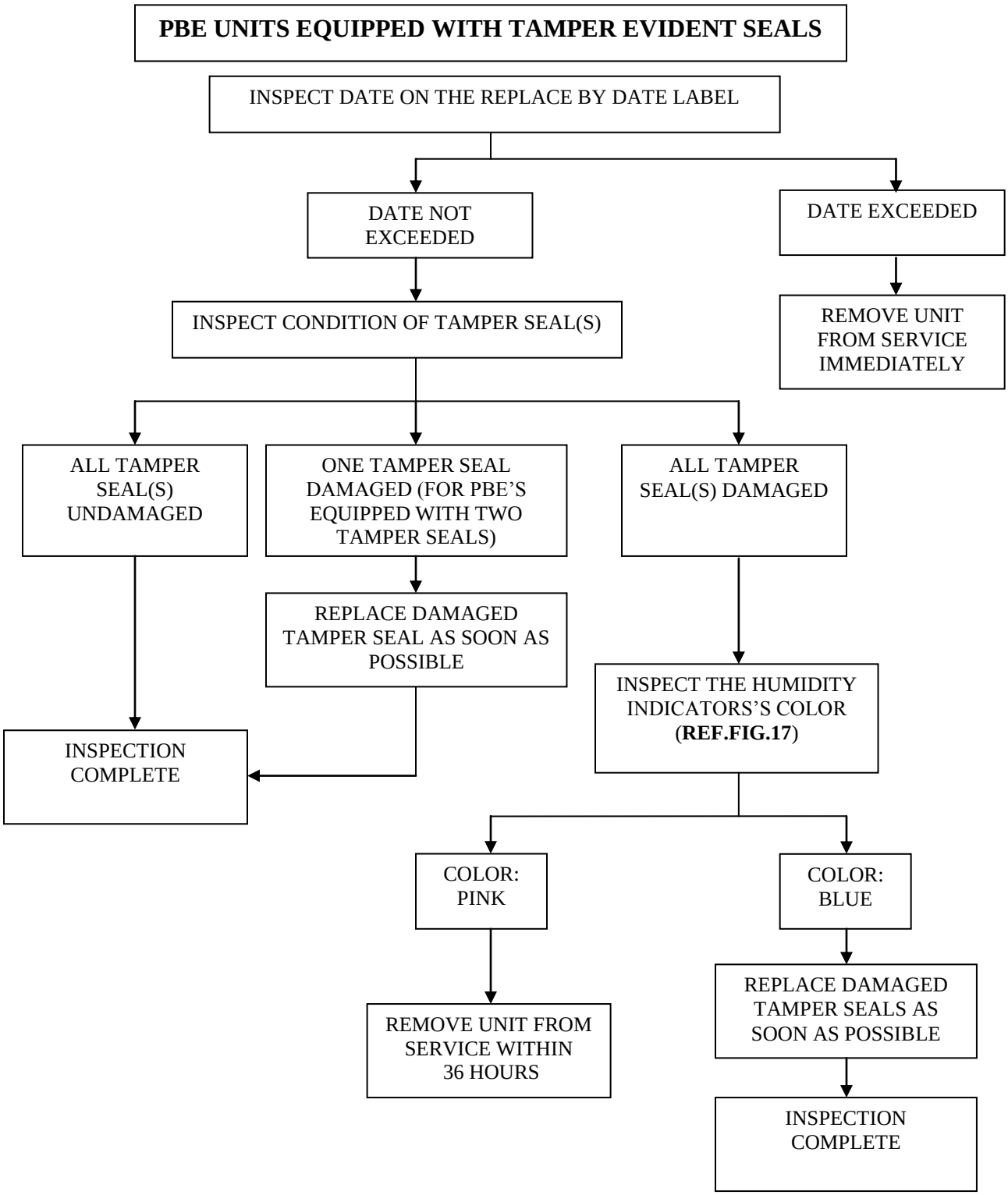


**INSPECTION AND FAULT ISOLATION FLOW CHART**
**FIGURE 19**

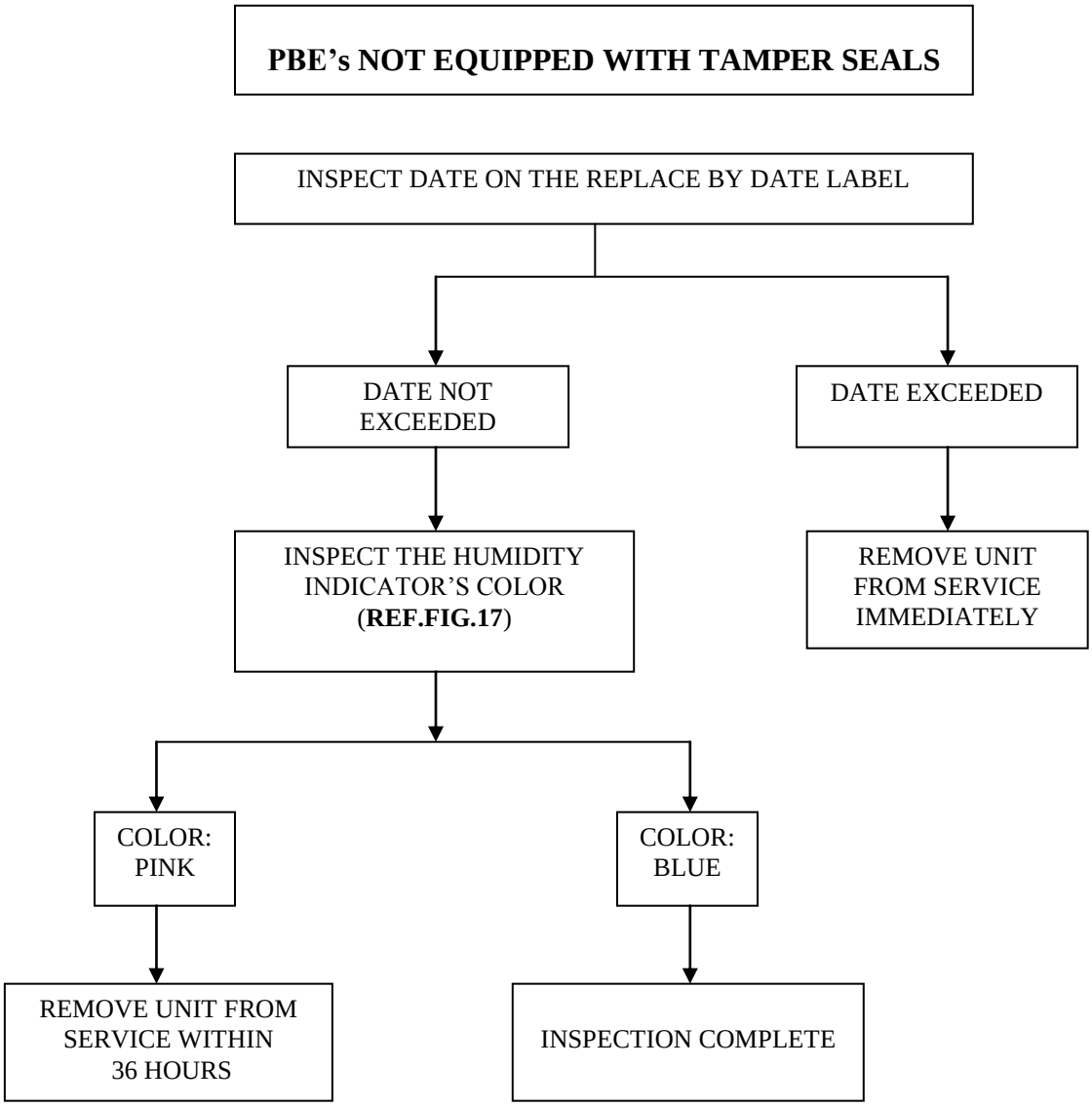


**INSPECTION AND FAULT ISOLATION FLOW CHART**
**FIGURE 20**

D. Statement of Warranty for Protective Breathing Equipment (PBE)

Essex Industries D/B/A Essex PB&R Corporation warrants that: (1) The Essex Crewmember PBE (hereinafter referred to as the "unit") meets the requirements of FAA TSO-C116 and TSO-C99; and (2) The Essex Crewmember PBE is, and will remain free from defects in material and workmanship, whether patent or latent, for up to the replace by date which is a period of ten (10) years and six (6) months from the date of manufacture when properly stowed aboard aircraft in containers supplied or approved by Essex Industries D/B/A Essex PB&R Corporation.

For those units equipped with a humidity indicator, the loss of vacuum in the inner packaging does not render the PBE unserviceable. Units with barrier pouches that have lost vacuum remain serviceable as long as the humidity indicator remains blue. Although if a unit is found to have a damaged barrier pouch, e.g. cut, puncture or other damage, the unit should be pulled from service and sent back for repair at the customer's expense.

The liability of Essex Industries D/B/A Essex PB&R Corporation for any defect in any unit, and the sole and exclusive remedy of the buyer, shall be limited to the repair or replacement of the defective unit, or a refund of the original purchase price (pro-rated in proportion to the ten (10) year and six (6) month warranty) at the sole discretion of Essex Industries D/B/A Essex PB&R Corporation. The obligation to repair, replace, or provide a pro-rated refund shall terminate ten (10) years and six (6) months after the date of manufacture of the unit.

This warranty is in lieu of all other warranties and representations, expressed or implied, and all other obligations and liabilities of Essex Industries D/B/A Essex PB&R Corporation. Correction of defects, in the manner and for the period of time provided above, shall constitute fulfillment of all liabilities of Essex Industries D/B/A Essex PB&R Corporation whether based on warranty, tort, contract or otherwise. Under no circumstances shall Essex Industries D/B/A Essex PB&R Corporation be liable for any punitive, special, incidental or consequential damages.

This warranty shall not apply to any unit that has been stowed in an unauthorized container, which has been repaired or altered by anyone other than Essex Industries D/B/A Essex PB&R Corporation, or which has been subject to misuse due to negligence or accident, or the failure to use the unit in accordance with the User Reference and Procedures Manual supplied by Essex Industries D/B/A Essex PB&R Corporation.

**THE FOREGOING WARRANTIES ARE IN LIEU OF ALL WARRANTIES, EITHER EXPRESSED OR IMPLIED, INCLUDING, BUT NOT LIMITED TO, ANY IMPLIED WARRANTY OF MERCHANTABILITY, NON-INFRINGEMENT, OR FITNESS FOR A PARTICULAR PURPOSE, AND OF ANY OTHER OBLIGATION ON THE PART OF ESSEX INDUSTRIES D/B/A ESSEX PB&R CORPORATION.**

E. Return Procedures

(1) Before returning any unit for repair, replacement or evaluation, call Essex Industries dba Essex PB&R Corporation at (314) 351-6116, or at 1-800-296-7587 (U.S. only) to obtain a Return of Material Number (ROM). To expedite handling, supply the following information:

(a) Product Model Number(s)

(b) Quantity to be returned

(c) Reason(s) for return

(2) Address all shipments to:

Essex Industries D/B/A Essex PB&R Corporation
4150 Carr Lane Court
St. Louis, MO 63119

(3) Freight on all shipments is to be prepaid.

(4) Shipping instructions will vary depending on mode of shipment.

(a) For domestic or international air shipments:

(i) Bill of lading description (**Ref. Figure 21 on page 43** for an example of a complete shipper's declaration for dangerous goods):

Life saving appliances, not self-inflating, UN3072

(ii) Hazard labeling (IATA/ICAO): three hazard labels are required:

Miscellaneous Class 9

(iii) Hazard Marking (IATA/ICAO):

Life saving appliances, not self-inflating, UN3072

(b) For domestic highway shipments:

(i) Bill of lading description:

Life saving appliances, not self-inflating, UN3072

(ii) Hazard labeling (DOT): None

(iii) Hazard Marking (DOT):

Life saving appliances, not self-inflating, UN3072

| Proper Shipping Name | Class or Division | UN or ID Number | Subsidiary Risk | Net Quantities | Packing Instructions |
|---|---|---|---|---|---|
| Life saving appliances, not self-inflating, UN3072 | 9 | UN3072 | | __* x 0.248 kg | 905 |

* Enter number of units shipped to calculate total net quantity.

**Example of Complete Shipper's Declaration for Dangerous Goods**

Figure 21

## 3. REPAIR

A. General

(1) The Essex Crewmember PBE is not an owner repairable system. (**Ref. para. 2.D. on page 41 for the statement of warranty, and 2.E. on page 42 for return procedures**).

(2) Minor maintenance repairs can be accomplished by the owner on stowage containers to refit broken, torn or missing tamper-evident seals, or to realign serviceable equipment within their stowage containers.

B. Refitting Broken, Torn or Missing Tamper-Evident Seals

(1) Three different, incompatible types of tamper-evident seals or labels have been used on the Essex Crewmember PBE, depending on the date of manufacture and type of stowage container (**Ref. Figure 2, page 11**). "Type A" is either a red-knotted or green-knotted plastic cable tie, "Type B" a green plastic padlock, and "Type C" is a tamper-evident label.

Refer to **Figure 2 on page 11** for the tamper-evident seal part numbers to be used for ordering seals from Essex PB&R that need replacement.

(2) Equipment pouches stowed in metal containers that are open at the top (MR-10042N) (**Ref. Figure 9 on page 21**) have two, "Type B" green plastic pad-lock tamper-evident seals at the top of the stowage container, one on each side of the container. To replace broken or missing "Type B" tamper-evident seals (green plastic padlock) follow these steps:

(a) First verify the serviceability of the equipment pouch (**Ref. Section 2, pages 36-40**). Then place the new tamper-evident seal inside of the container/pouch assembly with the notched arm facing up.

(b) Thread the notched arm through the large hole in the side of the container.

(c) Continue to thread the notched arm over the container and through the hole in the equipment pouch, from back to front.

NOTE: IT MAY BE NECESSARY TO MOVE THE EQUIPMENT POUCH SLIGHTLY TO ACCOMPLISH THIS STEP.

(d) Insert the notched arm into the body of the tamper-evident seal.

NOTE: GRASP THE LOOSE END OF THE SEAL WITH THE THUMB AND FINGER AS CLOSE TO THE END AS POSSIBLE.

(e) Push the notched arm into the body of the tamper-evident seal until it makes an audible clicking sound.

(3) To replace broken or missing "Type A" tamper-evident seals (red-knotted or green-knotted plastic cable tie) follow these steps:

(a) First verify the serviceability of the equipment pouch (**Ref. Section 2, pages 36-40**).

(b) With the lid opened, insert the knotted end of the tamper-evident seal through the hole located on the edge of the lid. Repeat procedure for the second tamper-evident seal for the opposite side of the lid.

(c) Close the lid, then insert the knotted end of the tamper-evident seal through the hole located on the side of the bracket. Repeat procedure for the second tamper-evident seal on the opposite side of the bracket.

(d) Verify that the lid is completely secure and affix with Hook and Loop Fastener Strap.

(e) Feed the knotted ends of the tamper-evident seals through the round cylindrical portion, marked "enter" on the red-knotted tie, of the seal. Pull knotted end through until secure. Cut off excess portion of the knotted end of the seal, leaving approximately ½ inch.

(4) To add a hole in the equipment pouch of Model Numbers MR-10042N **(either because it is torn or missing, or to convert to a Type B tamper evident seal).**

(a) Follow steps **3.B. (2) (a) and 3.B. (2) (b) on page 44**.

(b) Mark a spot on the equipment pouch where the notched arm comes in contact with the equipment pouch. Then remove the tamper-evident seal.

**CAUTION: BE CAREFUL NOT TO PUNCH A HOLE IN THE VACUUM SEALED POUCH AREA.**

(c) Using a 1/8 in (3mm) hole punch, carefully make a new hole in the equipment pouch, midway between the edge of the pouch and the edge of the heat-seal. The pouch heat seal is 3/8" wide.

(d) Reinstall the tamper-evident seal according to the steps outlined in **3.B. (2) (b) through 3.B. (2) (e) on pages 44 and 45**.

(5) For "Type C" tamper-evident seals (tamper-evident labels) found on closed stowage containers, follow these steps:

(a) Remove and discard the torn label(s).

(b) Remove any residual adhesive to provide a clean, dry surface.

(c) Position and affix the new label(s) so that the perforation on the label aligns with the top edge of the lid. There should be about 0.5 in (13 mm) clearance between the label(s) and the hinge side of the container.

C. Realigning Equipment Pouches Provided With Visual Service Indicators Within Stowage Containers

(1) Make sure that the equipment is serviceable before starting (**Ref. Section 2, pages 36-40**).

(2) Cut and remove tamper evident seal.

(3) Remove the equipment pouch from the bracket.

(4) For MR-10042N:

(a) Assure that the bracket is equipped with foam side spacers, located even with edge of the felt liner and flush against the face (label side) of the bracket. The unit must be mounted to a solid surface for successful position of pouch.

(b) Insert equipment pouch into bracket. If equipped with a VSI, it should be properly aligned.

(5) For MR-10034N, MR-10036N, and MR-10037N:

(a) Bracket should be empty of all contents.

(b) Insert equipment pouch into bracket, (label side to back).

(c) If equipped with a VSI, position two (2) felt rolls behind equipment pouch (one behind each oxygen bottle) to secure the unit.

(d) Close lid and re-latch. If equipped with VSI, it should be properly aligned.

(6) Replace tamper evident seals (**Ref. para. 3.B. on pages 44 - 46**).

(7) For units equipped with VSI's, the alignment is successful if:

(a) The VSI is no closer to the surface of the bracket than 0.25 in (6 mm).

(b) Security seals/labels can be refitted.

(c) Equipment can be shaken vertically, horizontally and sideways without the VSI protruding past the face of the container.

(d) On stowage containers with lids, the top will close and the clasp can be secured.

## 4. INSTALLATION AND ASSEMBLY

### A. Mounting Locations

(1) Locate each Essex Crewmember PBE within 3 ft (.9m) of a required fire extinguisher on board the aircraft, according to applicable FAA or airline regulations. All mounting locations should comply with FAR 45.15, and should be approved by the FAA or other regulatory authority before actual use.

Verify each mounting location for adequate clearance, especially behind seats and in overhead compartments, for ease of inspection, and for removing the pouch quickly during emergency use. A force of approximately 18-28 pounds will be required to remove the pouch, or to lift the lid, breaking the tamper-evident seals. Allow for adequate access.

(2) Mount the unit either vertically or horizontally. There should be at least 15 in (38 cm) of clearance between the stowage case opening and any surrounding structures or equipment.

(3) Mount the unit on a continuously flat (not curved) surface that is free of screw heads, anchors, hinges, knobs or other protrusions that could damage either the sealed pouch or the stowage container.

### B. Installation Steps

**WARNING: INSPECT EACH NEW UNIT FOR SERVICEABILITY BEFORE INSTALLING (Ref. Section 2, pages 36-40). DO NOT INSTALL ANY UNIT THAT FAILS THIS INSPECTION.**

(1) Open-Ended Bracket Installation (MR-10042N)

**CAUTION: REMOVE A NEW ASSEMBLY FROM ITS SHIPPING BOX BY GRASPING IT BY THE BOTTOM OF THE STOWAGE BRACKET. PULLING ON THE POUCH HANDLES CAN JEOPARDIZE THE INTEGRITY OF THE EQUIPMENT.**

(a) Remove the Essex Crewmember PBE pouch and stowage bracket assembly from its shipping box.

(b) Remove the cardboard that reinforces the back, by removing the masking tape.

**CAUTION: DO NOT REMOVE THE FELT ATTACHED TO THE BACK OF THE STOWAGE BRACKET.**

(c) Attach the complete Essex Crewmember PBE assembly to the bulkhead or mounting surface using six (6) anchors or lag screws appropriate for the holes on the stowage bracket. The top two anchors or screws must be able to support at least 30 lbs (14 kg).

(d) If the new unit has two new, green plastic padlock-type tamper-evident seals taped to the outside of the bracket, they must be installed (**Ref. para. 3.B. (2) on pages 44 and 45**).

NOTE: ADJUST OR MOVE THE POUCH SLIGHTLY AS NEEDED TO EASE THREADING THE NOTCHED ARM THROUGH THE HOLE.

Insert the notched arm into the attaching hole in the body of the seal. It will make a snapping noise when inserted correctly. Tug on the arm several times to make sure that it is properly locked.

.

(2) Closed-Ended Bracket Installation (MR-10046NS, MR-10046NY, MR-10049N and MR-10049NA)

(a) Remove the Essex Crewmember PBE pouch and stowage bracket assembly from its shipping box.

(b) The MR-10049N and MR-10049NA units come ready for installation. Other units come with the Backplate Assembly affixed to the Bracket with four cable ties, one on each corner. Attach the complete Essex Crewmember PBE assembly to the bulkhead or mounting surface by first using two (2) anchors or lag screws appropriate for the two middle holes on the stowage bracket. Then cut-off the cable ties on the corners of the bracket and install the remaining four (4) anchors or lag screws. The top two anchors or screws must be able to support

at least 30 lbs (14 kg).

(c) For MR-10046NS and MR-10046NY install either the red, knotted plastic cable ties or the tamper-evident labels to each side of the bracket. For MR-10049N or MR-10049NA install the tamper-evident labels to each side of the bracket. (**Ref. para. 3.B. (3) or para. 3.B. (5) on pages 45 and 46, respectively**).

(3) Flange-Mounted Stowage Case Installation (MR-10037N)

(a) Remove the Essex Crewmember PBE from its shipping box and inspect it.

(b) Attach the stowage case to the bulkhead or mounting surface using four (4) anchors or lag screws appropriate for the holes in the stowage bracket. The top two anchors or lag screws should be able to support at least 30 lbs (14 kg). The stowage case can be used to fabricate an installation template.

(4) Bracket-Mounted Stowage Case Installation (MR-10034N, and MR-10036N)

(a) Remove the Essex Crewmember PBE equipment from its shipping box and inspect it.

(b) Secure the stowage case in the supporting bracket provided and installed by the aircraft owner. If equipped with a VSI, verify that the VSI hole is not covered or obscured by the securing straps.

(c) The supporting bracket is not available from Essex. Local fabrication is required. The bracket and supporting straps should support at least 30 lbs (14 kg).

(5) Flame-Resistant Fabric Container Installation (MR-10035N)

(a) Remove the fabric container from its shipping carton and remove the equipment pouch from the fabric container.

(b) The fabric container can serve as an installation template.

(c) Attach the container either vertically or horizontally to the bulkhead or mounting surface using four (4) anchors or lag screws appropriate for the grommets. The four anchors or lag screws should support at least 30 lbs (14 kg).

(d) Place the Essex Crewmember PBE into the container and secure the flaps.

(6) Internal-Mounted Stowage Case Installation (MR-10022N, and MR-10050N)

(a) Remove the Essex Crewmember PBE equipment from its shipping box and inspect it.

(b) Secure the stowage case to the existing mounting holes using the four access holes in front of unit for tool insertion. If mounting holes do not exist reference internal maintenance procedures for machining the holes. The top two anchors or lag screws should be able to support at least 30 lbs (14 kg).

(c) Place the Essex Crewmember PBE into the container and secure the slide latch or clasp to lock stowage container. Verify that the humidity indicator can be seen through the window. Install the tamper-evident seals to each side of the bracket. Install hole plugs into front access holes when installation is complete.

(7) Bracket-Mounted Stowage Case Installation (Bracket provided) (MR-10039N)

(a) Remove the Essex Crewmember PBE equipment from its shipping box and inspect it.

(b) Unfasten supporting strap and remove mounting bracket from stowage case.

(c) Secure the mounting bracket to the four existing mounting holes. The top two anchors or lag screws should be able to support at least 30 lbs (14 kg). Replace the stowage case and secure it by fastening the supporting strap.

(d) Verify that the humidity indicator can be seen through the window. Install the tamper-evident labels to each side of the bracket.

(8) Flame-Resistant Fabric Container Installation (MR-10051N)

(a) Remove the fabric container from its shipping carton.

(b) Affix the fabric container to overhead using appropriate mounting straps (mounting straps are not supplied by Essex PB&R Corporation). The mounting straps should support at least 30 lbs (14 kg).

(9) Bracket Mounted Flame-Resistant Fabric Container Installation (MR-10052N)

(a) Remove the Essex Crewmember PBE equipment from its shipping box and inspect it.

(b) Unfasten supporting straps and remove mounting bracket from fabric stowage container.

(c) Secure the mounting bracket to the four existing mounting holes. The top two anchors or lag screws should be able to support at least 30 lbs (14 kg). Replace the fabric stowage container onto the mounting bracket and secure it by fastening the supporting straps.

(d) Verify that the humidity indicator can be seen through the window.

## 5. RETROFITTED STOWAGE BRACKETS

A. Introduction

Retrofitted Stowage Brackets changed the stowage bracket configuration of Essex PBE Model Number MR-10042N from an Open-Ended, Stowage Bracket Container to a Closed Stowage Bracket Container.

B. Description

Units that were retrofitted by Essex, or by the customer, have been labeled as Model Numbers MR-10046RS or MR-10046RY. These are Closed Stowage Bracket Containers similar to Model Numbers MR-10046NS, and MR-10046NY (**Ref. Figure 23 on page 52**).

The operating features, method of inspection, repair and installation & assembly of the retrofitted units are identical for those used on model numbers MR-10046NS, and MR-10046NY. Reference the corresponding sections of this manual.

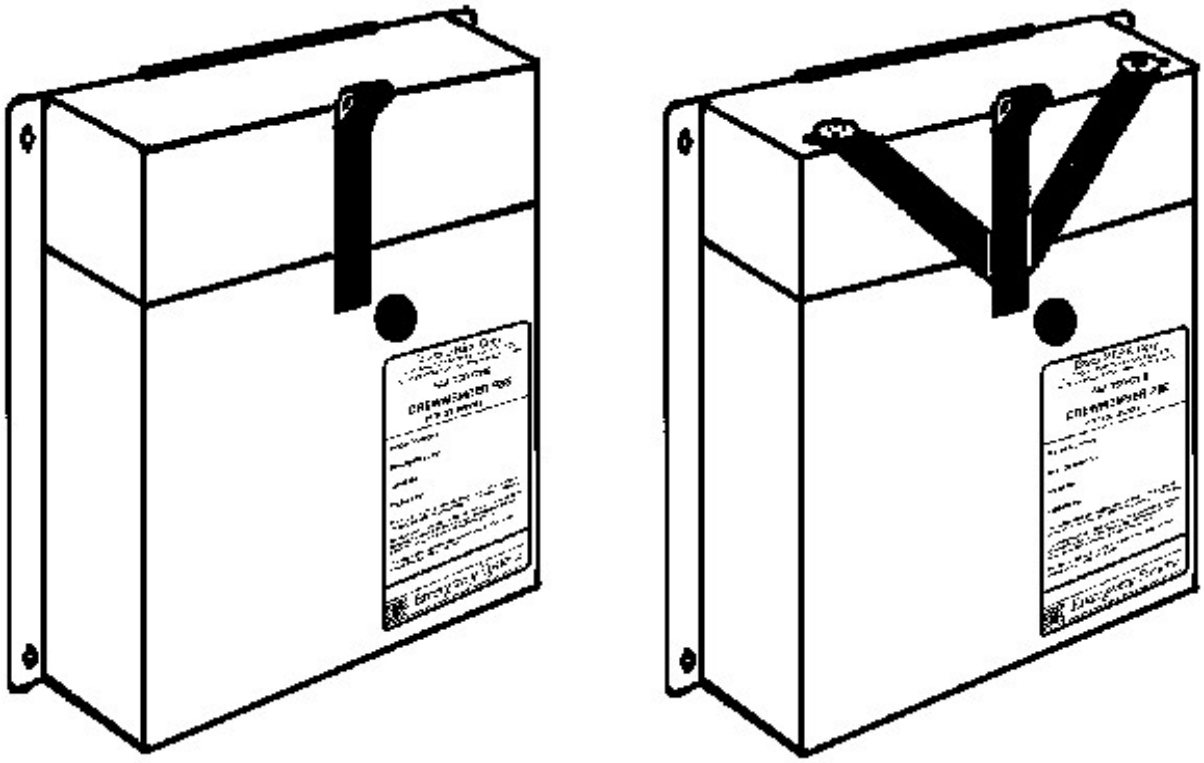

**MR-10046RS** **MR-10046RY**

Retrofitted Closed Stowage Bracket Configuration
(MR-10046RS and MR-10046RY)

**Figure 23**

## 6. THE ESSEX CREWMEMBER PBE TRAINING UNIT

A. Introduction

(1) The Essex Crewmember PBE training unit (MR-10021N) is designed to help teach how to activate, don and doff the equipment correctly.

(2) This section reviews the differences between an Essex Crewmember PBE training unit and a live unit, how to practice putting on the training hood, and how to properly care for the training unit. When practicing with the Essex Crewmenber PBE Trainer, it is recommended that the special, disposable, sanitary hood liner be used for good personal hygiene (**Ref. para. 6.C. (1) below**).

B. Operating Features

There are several major differences between the training unit and a live unit.

(1) The training unit is reusable.

(2) A sanitary plastic liner protects the user from unsanitary conditions while wearing the training hood, allowing full visibility, and protecting the hood from possible damage.

**WARNING: DISCARD THE SANITARY LINER AFTER EACH USE.**

(3) The training unit has two empty, non-functioning oxygen cylinders and non-functioning carbon dioxide control panels. The training unit is designed to mimic a live unit. Because there is no oxygen in the training unit, the hood has breathing holes.

(4) There is no Service/End-of-Service Indicator in the training unit.

C. Operating Steps

(1) Plastic Training Liner (Optional)

Sanitary plastic liners, P/N CP3205, can be ordered from Essex PB&R.

Adjust the plastic liner so that its top paper edge is horizontal at the tip of the nose, and the crease is centered vertically in the middle of the face.

Fold the liner's rear pleat over, then secure it with ordinary cellophane-type tape (**Ref. Figure 25A on page 57**).

(2) General Sequence of Steps

To open the training unit hood, follow the same sequence as for a live unit but with the differences described in steps (a) through (d) below.

(a) Remove the pouch containing the hood from its storage container.

(b) Open the pouch. Separate the two empty oxygen bottles with the same motions that would be used for a live unit (**Ref. paragraph 1.C. (4) (a) on page 31**). This simulates activating the oxygen system for the hood. The training unit uses spring clips to mimic the resistance of a live unit's valves.

**WARNING: WHEN USING THE OPTIONAL TRAINING LINER, HOLD THE HOOD DIRECTLY OVERHEAD WHEN DONNING IT. DISTURBING THE LINER CAN INTERFERE WITH VISION OR IMPAIR BREATHING (Ref. Fig. 25B on pg 57).**

(c) Open the hood and don it quickly (**Ref. para. 1.C. (5) on page 32**). Spread the neck seal apart, as with a live unit. Next, unlike a live unit, hold the training unit directly overhead and lower it straight down over the plastic hood liner. Have a qualified observer check the hood and liner for proper placement.

(d) Remove the hood and discard the liner when the practice session is complete.

(3) Verbal communication with the training hood with an interphone, megaphone and microphone are similar to the live hood. (**Ref. para. 1.B.(7) on page 10**) (**Ref. Figures 1A and 25C on pages 10 and 57 respectively**).

D. Replacing Torn or Damaged Neck Seals

Replacement neck seals, P/N CP2126, can be ordered from Essex PB&R.

(1) To replace a torn or damaged neck seal follow these steps:

(a) On the inside of the hood, remove the black plastic washers from the valve stems. Remove the oxygen cylinders and felt washers from the neck seal and red slings.

NOTE: NEWER VERSIONS OF THE PBE TRAINERS HAVE ELIMINATED THE BLACK PLASTIC WASHERS AND UTILIZE SOCKET HEAD CAP SCREWS TO AFFIX THE EMPTY OXYGEN CYLINDERS. USING AN ALLEN WRENCH, UNSCREW THE SOCKET HEAD CAP SCREWS AND REMOVE FENDER WASHERS TO REMOVE THE OXYGEN CYLINDERS.

(b) Remove the damaged neck seal by disconnecting the Hook and Loop fastener attachment.

(c) Attach the Hook and Loop Fastener from the new neck seal to the hood making sure to orientate the neck seal with the two valve holes facing the sides of the hood and towards the back of the hood. See **Figure 24 on page 56** for proper placement of the neck seal.

(d) Reinstall oxygen cylinders.

E. Maintenance Procedures

**CAUTION: TREAT THE TRAINING UNIT WITH CARE SO AS NOT AFFECT ITS DURABILITY.**

(1) Clean and disinfect the training hood periodically so it will continue to work effectively.

(a) Moisten a cotton cloth with 50-50 mixture of alcohol and water.

(b) Wipe all inside and outside surfaces. Let dry.

(2) Clean and disinfect the neck seal periodically so it will continue to work effectively.

(a) To clean the neck seal, soak a cotton cloth with a commercially available disinfecting cleaner.

(b) Wipe all inside and outside surfaces. Let dry.

F. Handling and Storage

(1) Fold the training unit hood so that there is a long crease up the back. Next fold the front peak of the hood. Finally, fold the hood in half.

(2) Insert the folded training unit into the storage bag. Store the folded training unit in a suitable location.

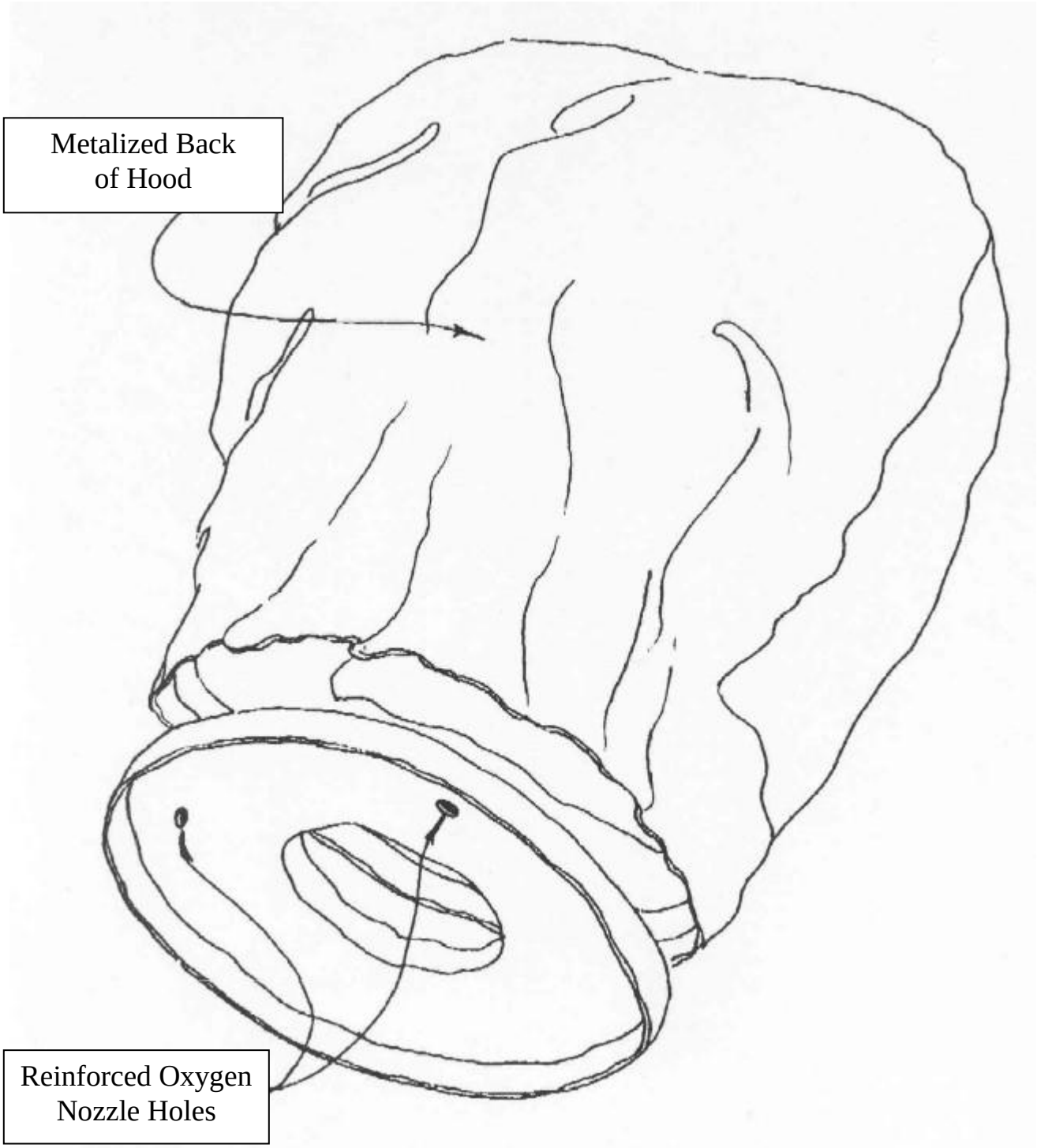


Proper Placement of Replaceable Neck Seal

Figure 24

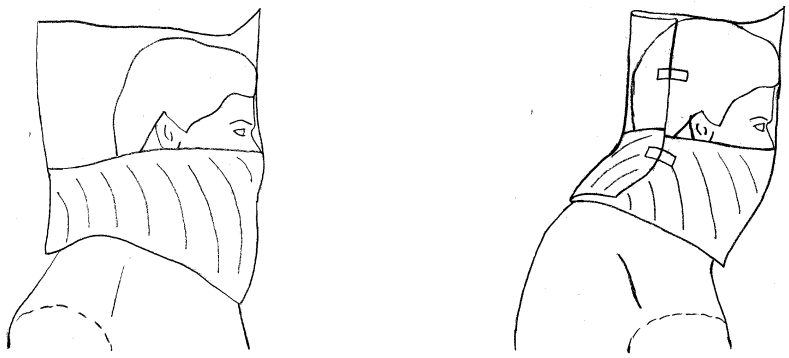

A. Donning the Plastic Training Liner (Disposable)

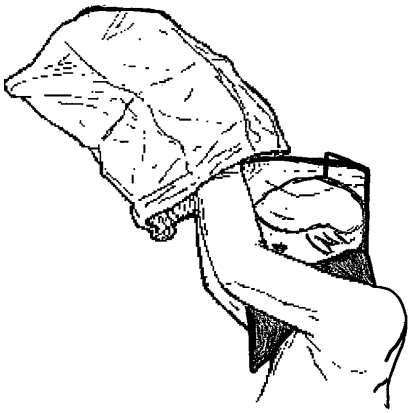

B. Donning the Training Hood over the Training Liner

C. Verbal Communications Using the Interphone

Use of the Training Hood

Figure 25